KS4471,2,5,8FL
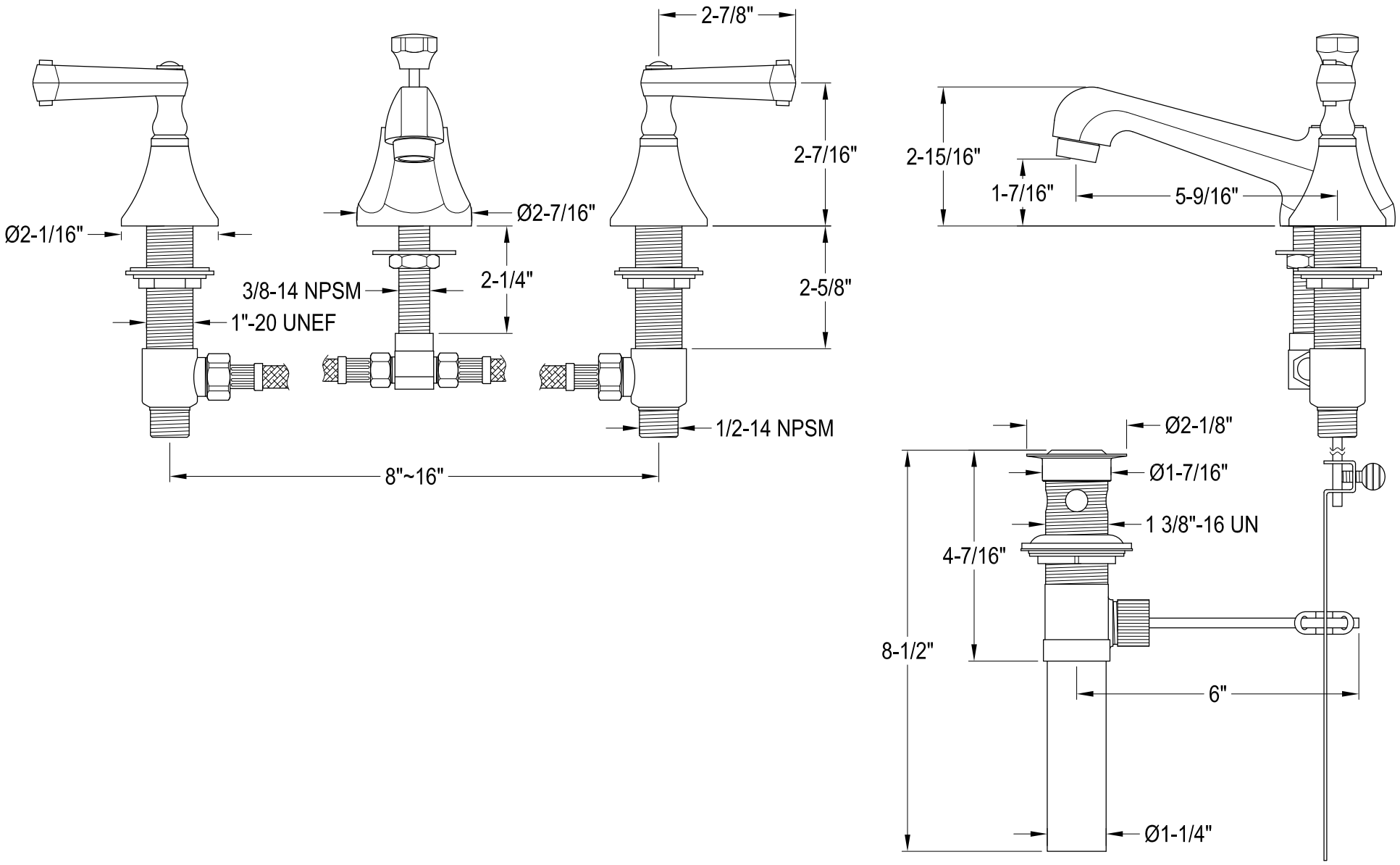
Widespread Lavatory Faucet with Brass Pop-Up